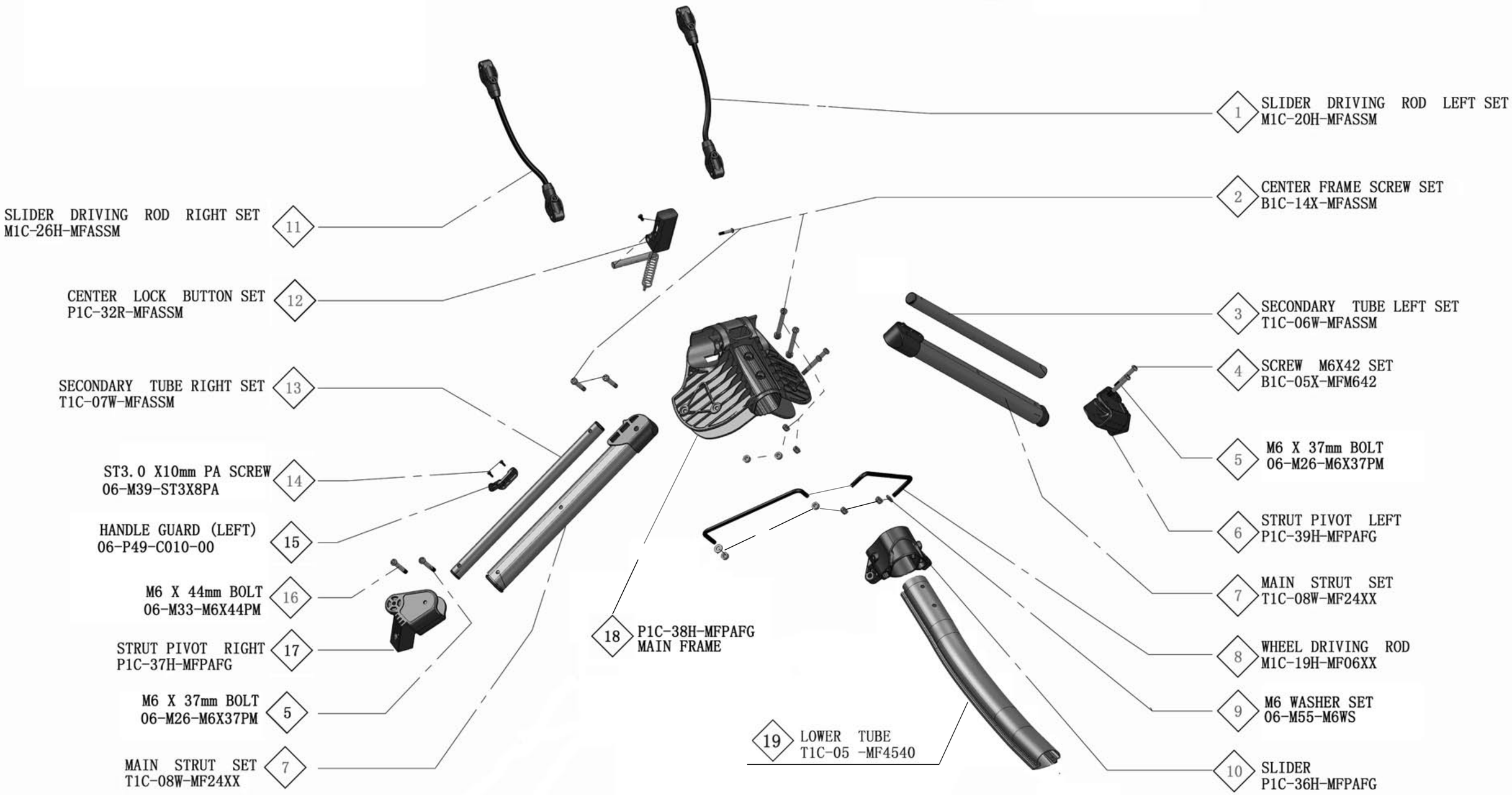RV1C MAIN FRAME ASSEMBLY V1.0